2” Compact Stand Alone Spin-Klin Filter

Serial number:	_____
Order number:	_____
Catalog number:	_____
Filtration degree:	_____
Tested by:	_____

Installation and Operation Instructions

2" Compact Spin Klin Disc Filter

Orders and support by
Irrigationglobal.com
Arkal Amiad Netafim

Installation Operation Maintenance

2” Compact Stand Alone Spin-Klin Filter

1. Introduction

General

We congratulates you for purchasing the 2" Spin Klin compact filter. Our filters are easy to install, use and service; they require no special skills to operate. For operation and maintenance of this filter, please follow the instructions in this manual. This 2” Spin Klin filter is an automatic self-cleaning filter designed for non-hazardous liquids only and for operation within the pressure framework described in the specifications table.

2. Safety Instructions

General Safety Instructions

- The manufacturer filtration products always operate as components in a larger system. It is essential for the system designers, installers and operators to comply with all the relevant safety standards.
- Prior to installation, operation, maintenance or any other type of action carried out on the filter, read carefully the installation and operation instructions.
- During installation, operation or maintenance of the filter all conventional safety instructions should be observed in order to avoid danger to the workers, the public or to property in the vicinity.
- The system has to be used for non-hazardous liquids only!
- Please note: The filter enters into a flushing mode automatically, without any early warning.
- No change or modification to the equipment is permitted without a written notification given by the manufacturer or by its representative, on the manufacturer’s behalf.
- Always observe standard safety instructions and good engineering practices whilst working in the filter’s vicinity.
- Use the filter only for its intended use as designed by the manufacturer, any misuse of the filter may lead to undesired damage and may affect your warranty coverage. Please consult with the manufacturer prior to any non-regular use of this equipment.
- System's cleaning and maintenance shall be carried out only when explosive atmosphere is not present!

Installation

General

- Install the filter according to the detailed Installation Instructions provided with the filter by the manufacturer and according to the description given in this manual.
- Make sure to leave enough clearance, side and top, so as to enable easy access for future treatments and safe maintenance operations.
- The user should arrange suitable lighting at the area of the filter to enable good visibility and safe maintenance.
- The user should arrange suitable platforms and safety barriers to enable easy and safe access to the filter without climbing on pipes and other equipment. The user should verify that any platform, barrier, ladder or other such equipment is built, installed and used in accordance with the relevant local authorized standards.
- Check and re-tighten all bolts during commissioning and after the first week of operation.
- Use only appropriate standard tools and equipment operated by qualified operators when installing, operating and maintaining the filter.
- When installation is required in hazardous environment sites, underground or high above ground, make sure that the site design and the auxiliary equipment are appropriate and that installation procedures are carried out in accordance with the relevant standards and regulations.
- Ensure walking areas about the installation are slip free when wet.

Shipment and transporting

- Shipping and transporting the filter must be done in a safe and stable manner and in accordance with the relevant standards and regulations.
- For shipping, lifting and positioning the filter, use only approved lifting equipment and authorized employees and contractors.

Electricity

- Electric wiring should be performed by an authorized electrician only, using standardized and approved components.
- The system must be installed with suitable electrical earthing that would prevent any electrostatic discharge from the system.
- Install a **lockable** main power cut-off switch close to the control panel.
- If due to site constraints, the control panel is installed without a clear line-of sight of the filter, an additional **lockable** power disconnect cut-off switch should be installed near each filter unit.
- Installation of the filter should be performed so as to avoid direct water splashing on the electrical components or on the control panel.

Pneumatics

- Install a **lockable** main cut-off switch, **featured with a pressure release mechanism,** on the compressed air supply line close to the control panel.
- If the control panel is installed far away and there is no eye contact with the filter, a **lockable** compressed air cut-off switch, **featured with a pressure release mechanism,** should be installed near each filter unit.
- The user should make sure that the compressed air supplied to the filter never exceeds the maximum designated pressure for this filter. An air-pressure reduction valve should be installed on the compressed air supply line upstream of the filter's pneumatic inlet port.

Hydraulics

- Extra safety devices should be installed on hot water applications to avoid skin burn danger.
- The user should install a manual Water Cut-off Valve next to the filter's inlet port.
- In cases where the downstream piping network downstream of the filter is pressurized an additional manual Water Cut-off Valve should be installed next to the filter outlet port.
- The user should make sure that the system includes a Pressure Release / Drainage Valve to enable release of residual pressure prior to any maintenance procedure performed on the filter.
- The user should make sure that the filter is never exposed to water pressure exceeding the maximum designated pressure for this filter, if needed a Pressure Reduction Valve should be installed upstream of the filter's water inlet port.
- Please note that the maximum working pressure indicated at the filter's specifications table includes the pressure caused by fluid hammer and pressure surge effects.

Civil Engineering

- Make sure that the filter installation is done by the manufacturer-qualified technicians.
- Make sure that any civil engineering work at the installation site such as construction, lifting, welding, etc. is done by qualified workers / technicians / contractors and in accordance with the relevant local standards.
- While using lifting equipment, make sure that the filter or the lifted part is chained securely and in a safe manner.
- Do not leave lifted equipment if there is no necessity. Avoid working below lifted equipment.
- Wear a safety helmet while using lifting equipment.
- Make sure that the flooring is sloped to for drainage and to avoid accumulation of liquids.

Commissioning

- Read carefully the Commissioning and the First Start-up Operation instructions prior to any attempt to operate the filter.
- In order to achieve maximum performance and smooth operation of the filter it is crucial to perform the startup and first operation procedures exactly as described in this manual.
- Commissioning the filter should be done by an authorized the manufacturer technician, do not attempt to commission the filter unaccompanied since this may lead to undesired damage and may affect your warranty coverage.

Operation and Control

- Do not operate the filter before reading carefully and being familiar with its operation instructions.
- Observe the safety stickers on the filter and never perform any operation contradicting the instructions given.
- Never operate or use the filter for purposes other than its original design and operational envelope.
- The system has to be used for non-hazardous liquids only!
- System's cleaning and maintenance shall be carried out only when explosive atmosphere is not present!

Before any maintenance or non-regular operation

- Servicing the filter should be done only by technicians authorized by the manufacturer.
- System's cleaning and maintenance shall be carried out only when explosive atmosphere is not present!
- Disconnect the filter from the power supply and lock the Main Power Switch.
- Disconnect the compressed air supply, release the residual pressure and lock the Pneumatics Main Valve.
- Disconnect the filter from the water system by closing and securing the manual inlet valve. In cases where the downstream piping network is pressurized, close and secure the manual outlet valve also.
- Release the residual water pressure by opening the pressure release / drainage valve.
- Empty the filter by opening the drainage valve.
- In hot water systems wait till the filter components cool off to a safe temperature.
- Place warning signs around the work area as required by the local standards and procedures.
- Inspect the filter’s safety stickers and replace any damaged or faded sticker.

Special Note

Before opening the filter lock, check that there is no pressure in the filter.

3. System Drawing

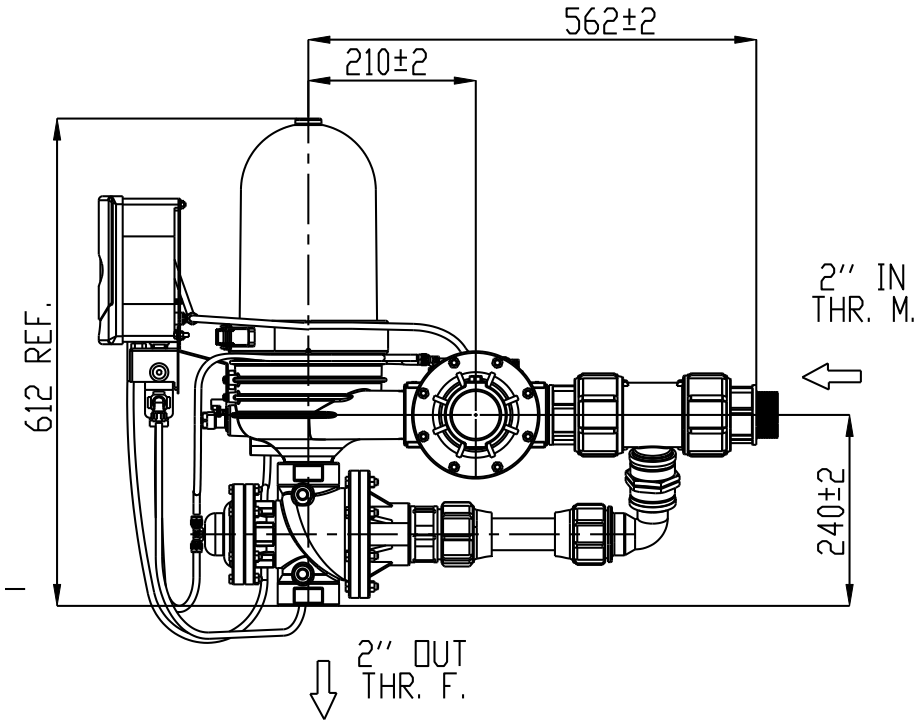

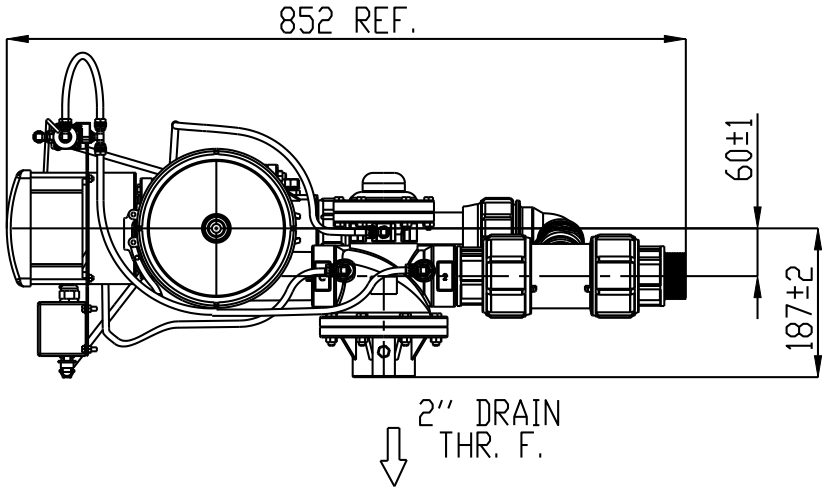

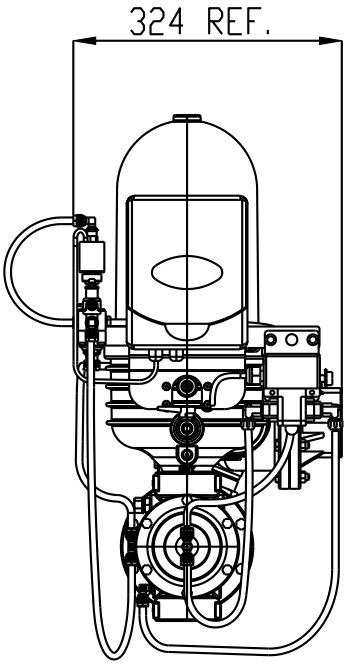

4. Description & Operation

Disc Filtration Technology

We uses a specially designed disc filtration technology. Thin, color-coded polypropylene discs are diagonally grooved on both sides to a specific micron size. A series of these discs are then stacked and compressed on a specially designed spine. When stacked, the groove on top runs opposite to the groove below, creating a filtration element with a statistically significant series of valleys and traps for solids. The stack is enclosed in corrosion and pressure resistant housing.

During the filtration process, the filtration discs are tightly compressed together by the spring's power and the differential pressure, thus providing high filtration efficiency. Filtration occurs while water is percolation from the outer diameter to the inner diameter of the element. Depending on the micron rating, there are from 18 (in 400 micron discs) to 32 (in 20 micron discs) stopping points in each track, thus creating the unique in-depth filtration.

Table of Filtration Grades of the Discs and Color Code

Color Code	Blue	Yellow	Red	Black	Brown	Green	Purple	Gray
Micron	400	200	130	100	70	55	40	20
Mesh	40	80	120	140				
PP								
Nylon								

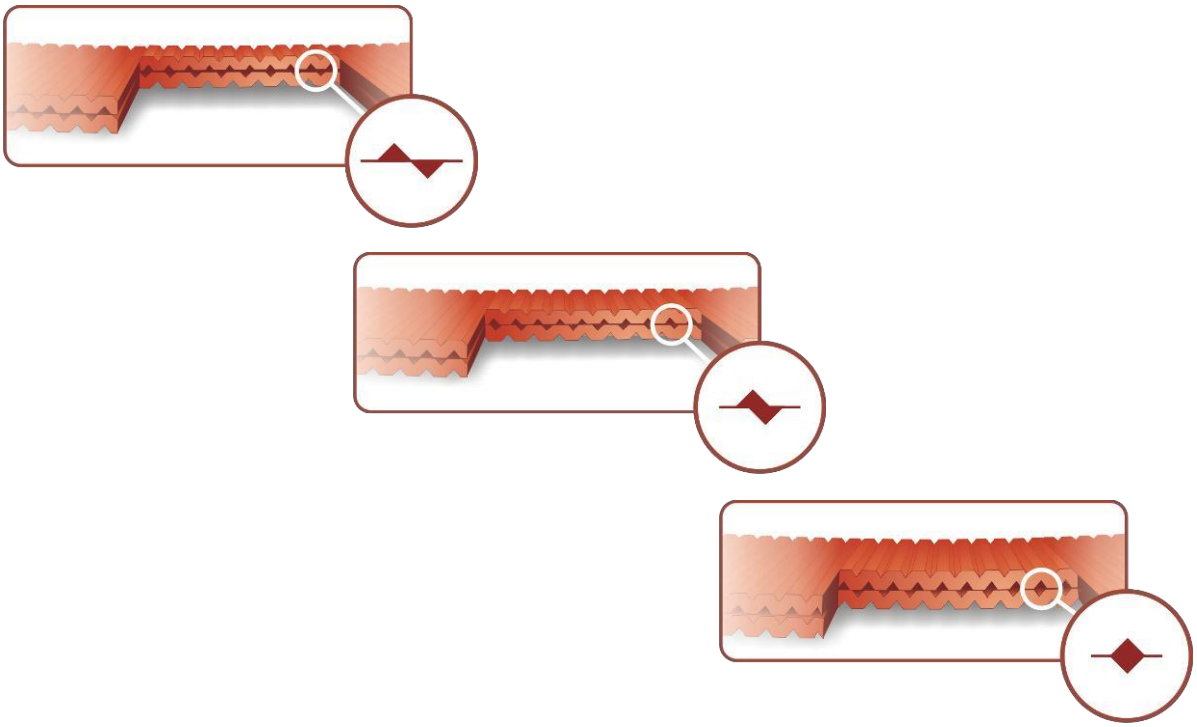

Spin Klin Technology

Spin Klin Spine - The Core of the Spin Klin Filtration System

The Spin Klin® discs are stacked on the Spin Klin® spine. The discs are color-coded according to micron size, and are assembled to suit your water filtration requirements. The spine assembly has a spring compression unit and an internal piston, which operate during alternate filtration or back-flush modes. Inside the housing a spring and the pressure difference compress the discs tightly during the filtration process, forcing the water to flow between the grooves and trap the solids.

Spin Klin Automatic Back-flush Operation

Activated by an external command (differential pressure or time) alternate units of the Spin Klin® system go into back-flush mode. Three-way valve closes the inlet to the filter pod and opens the drain. During the back-flush process, the compression spring is released and the pressure difference is eliminated.The spine piston rises up, releasing the pressure on the discs. Tangential jets of clean water are pumped at high pressure in the opposite direction through nozzles at the center of the spine. The discs spin free and clear, loosening the trapped solids. Solids are quickly and efficiently flushed out through the drain.

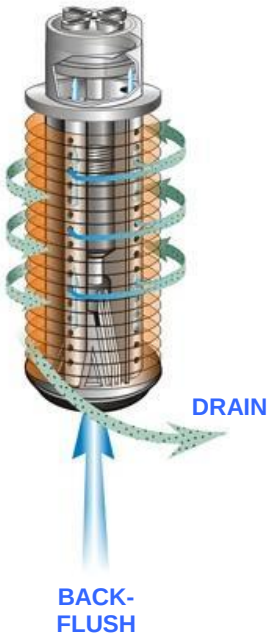

Modes of the filter's Control valve

Filtration Position:

Water flows from port [A] (main supply) to port [B] (filter connection). Port [C] (drain water outlet) is closed by the seal.

Back-flush Position:

Command pressure is applied to the diaphragm's control chamber through port [D]. The diaphragm moves the sealed shaft, port [A] closes, preventing flow to the filter. Port [C] opens, allowing flushing water to flow from port [B] (filter connection) to the drain.

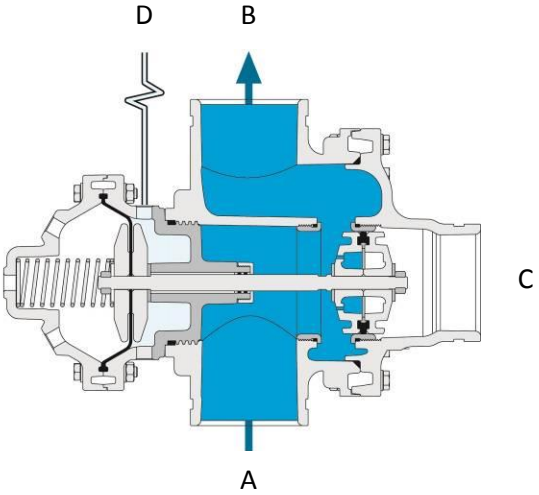

Filtration Mode

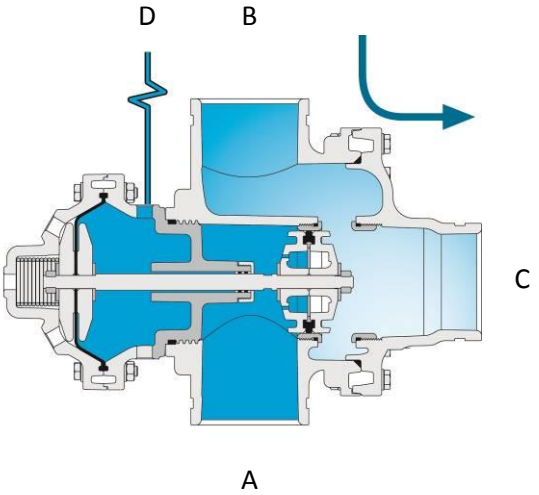

Back-flush Mode

Modes of Operation

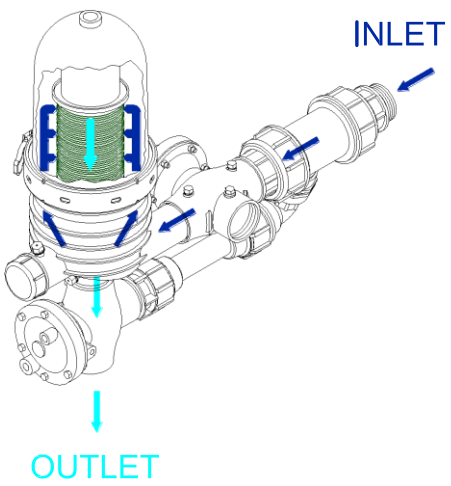

Filtration Mode

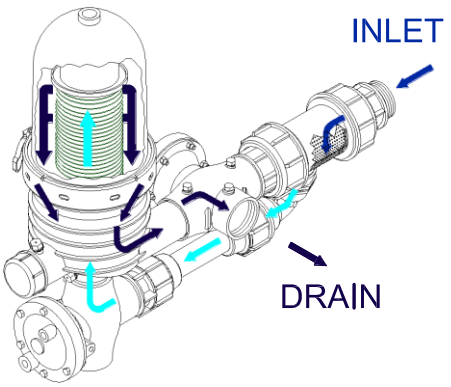

Back-flush Mode

Filtration Process

During the filtration process, the water flows through the inlet into the filter through the inlet valves. The filtered water flows through the outlet manifold of the filter.

Back-flush Process

Command based on pressure differential or time settings is sent from the controller to (two) separate components in the filter:

1. The Inlet valve enters to back-flush mode (entrance closed, drain opens).
2. The Outlet valve enters to back-flush mode (downstream closed, filter bypass opens).

Water flows via the bypass filter screen, through the bypass into the outlet valve. It enters the main filter (which is open), where jets of water flush the grooves in the discs as the discs spin. The water carries away impurities toward the inlet valve. At the end of the back-flushing process (20 seconds) the back-flush command is withdrawn, the discs are compressed and the SPIN KLIN returns to the filtration mode. The inlet and outlet valves return to the filtration mode. Water flows once again into the filter, carrying with it the impurities that are collected on the bypass filter screen during back flush.

5. Technical Data

Parameters and head-loss chart

Parameters	METRIC	US
Maximum pressure	10 bar	145 psi
Maximum flow rate	20 m^3/h	88 gpm
Minimum flow rate	8 m^3/h	35 gpm
Minimum back-flush pressure	2.8 bar	40.6 psi
Filtration surface area	880 cm^2	136.4 in^2
Filtration volume	1,148 cm^3	70 in^3
Back-flush water volume	33 liters	8.7 gal

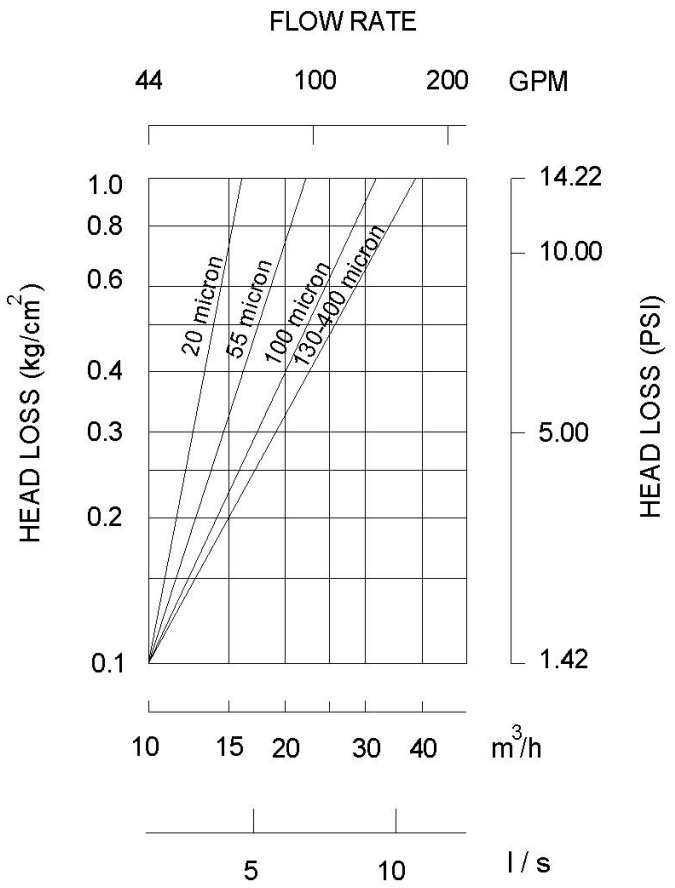

6. Installation and Operation

Installation

A. Remove from package, check contents and check for any transport damage to the unit (system operates under pressure!).

B. Make sure that the inlet and outlet orientation is correct (shown by arrows on filter).

C. Connect back-flush drainage line.

D. Make sure that the filter clamps are securely closed.

E. Connect air supply to the filter and the solenoid

Controller Please - Note: The electronic controller is not included.

A. Refer to manufacturer's user manual before installing controller.

B. Check that the power supply is suitable for the solenoids & controller.

C. Make sure the solenoid manual switch is set to automatic.

D. Check that the pressure differential gauge is connected to appropriate ports.

E. Set the starting back-flush switch to ΔP 4-6 meters (6-9psi).

Start-up Operation

A. Gradually open the inlet valve (make sure that the outlet valve, if installed, is open).

<u>WARNING</u> Take precaution while operating the filter as the filter may enter the back-flush mode automatically, without warning.

B. Check the filter assembly and its connections for leaks.

C. Perform a back-flush cycle by disconnecting the low-pressure tube from the differential pressure indicator (closing of the electrical circuit) – re-connect it immediately as back-flush starts.

D. Verify that the hydraulic back-flush valve closes after 20 seconds.

E. Verify that the backpressure during back flush is at least 28m (40.6 psi).

F. When the filter is clean, verify that the differential pressure between inlet and outlet does not exceed 3 m (5 PSI).

G. Check that the differential pressure indicator is set to 5m (7 psi)

H. Perform an additional back flush cycle manually by rotating the operation handle (turn clockwise 90º) located on the solenoid valve.

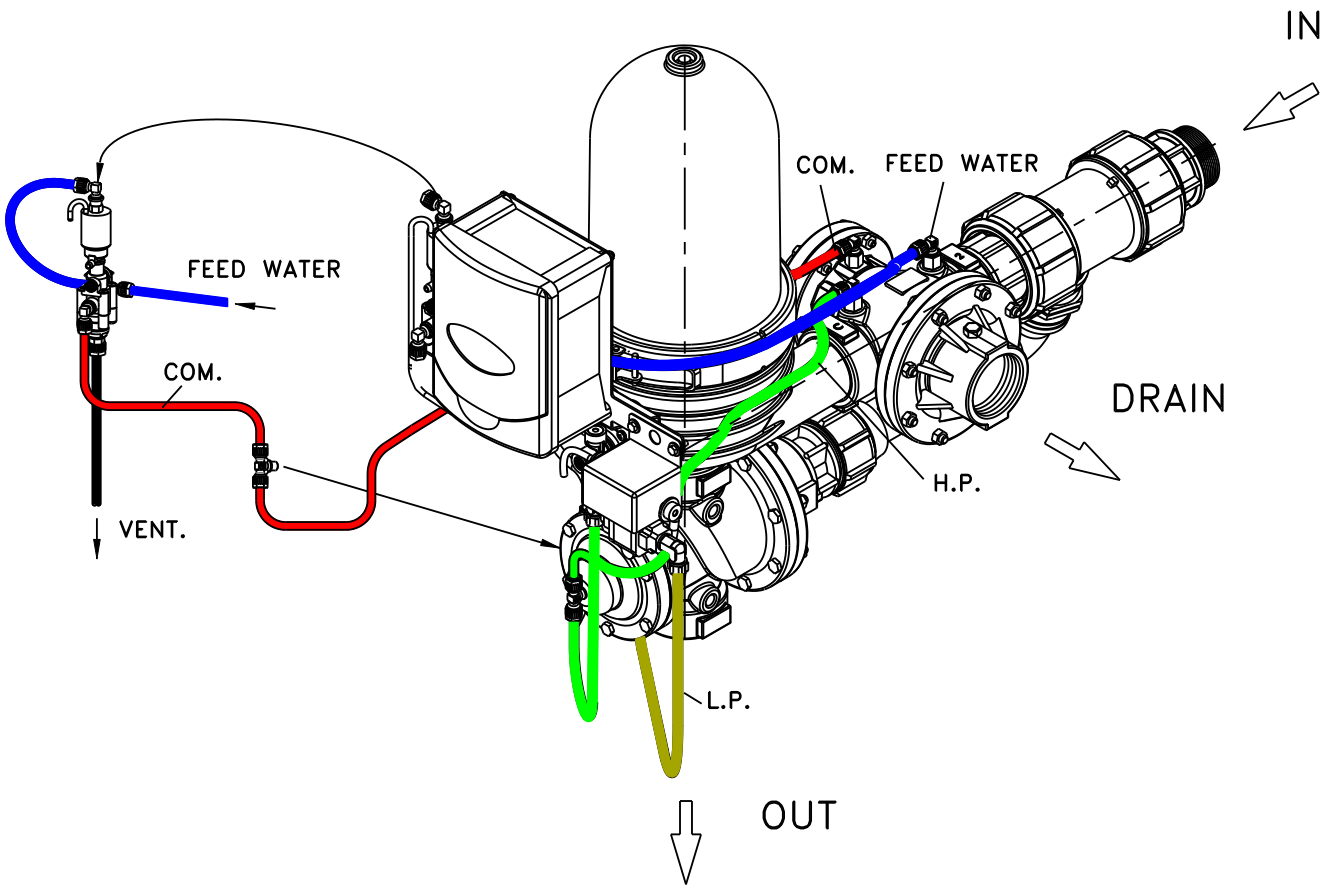

7. Spin-Klin System Maintenance

Bypass Filter Maintenance

1. Close the inlet water valve and release the pressure.
2. Use a wrench to release tightening nuts.
3. Unscrew the nut completely.
4. Twist the bypass filter.
5. Remove the internal screen element.
6. Rinse the screen element properly.
7. Reassemble in reverse order of above steps (5 thru 2).
8. Open the 2” inlet valve.

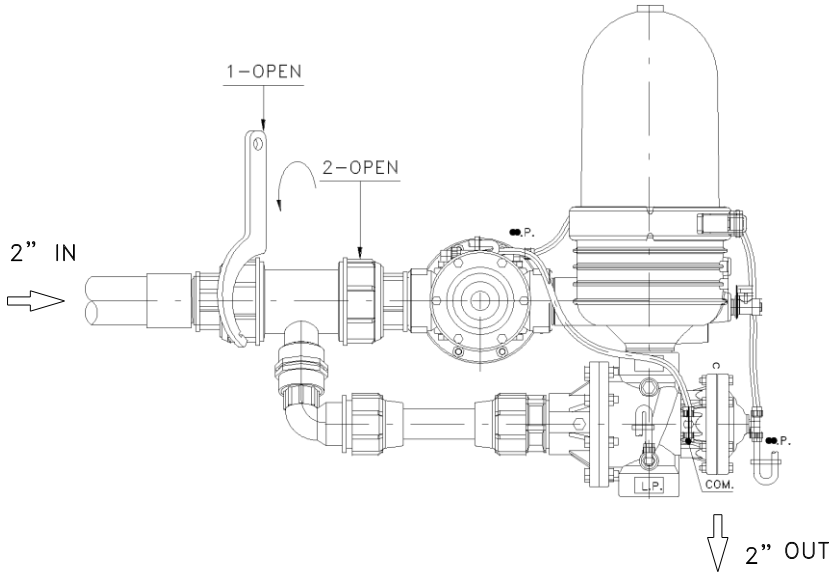

Figure 4: Bypass

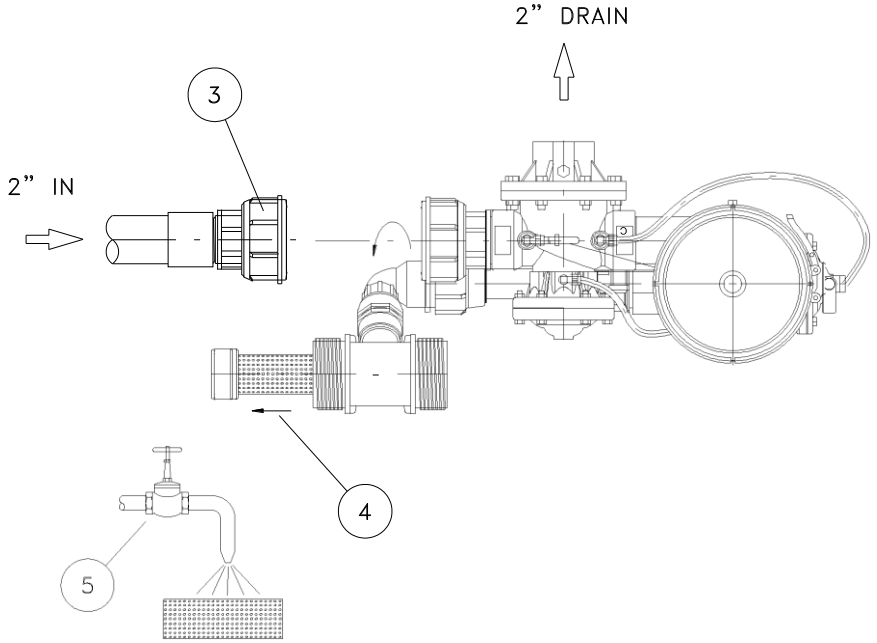

Monthly Maintenance

Check inlet /outlet pressures:

When the pressure differential is above 5 m / 7 PSI, activate automatic back flush of the Spin Klin filter.

In the event that the pressure differential remains high, check for possible failures.

Check for leakages from the drain manifold:

When there is a leakage of water during the filtration stage, check for possible failure at the back-flush valve seals.

Back-flush controller performance:

Check that the controller timing parameters are correctly adjusted and activate automatic back-flush cycle. In the event of possible failure at the back-flush controller, check for possible failures.

Cleaning of the Command Filter:

Close the command-filter inlet valve; release the pressure trapped at the command-filter and remove the cover. Thoroughly clean the filtration element, and then reinstall the command filter element and cover, then open the inlet valve.

Winterization:

In order to prevent the filter battery becoming damaged during water freezing – drain all the water from the filter battery and the command filter and leave the drain valve open.

NOTE:

Before performing any maintenance work on the battery, make sure all water and air connections are disconnected and that the pressure has been released.

Seasonal Maintenance – Cleaning the Discs

When manual cleaning of the discs is required, please follow the steps described below:

Make sure that system is not under pressure! Release the clamp and remove the cover. (Figure 1)

Unscrew the butterfly-nut on the filtration element. (Figure 2)
Remove the tightening cylinder. (Fig. 3)

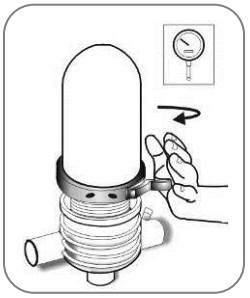

Figure 1

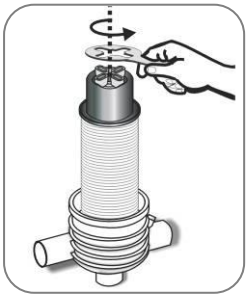

Figure 2

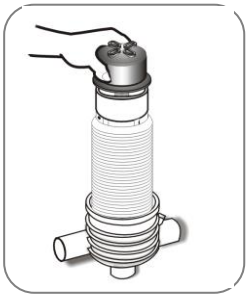

Figure 3

Remove the discs (for convenience we recommend using a plastic bag) (Figure 4, 5). Tie each set on a string and place them in a cleaning solutions (HCL, Chlorine, or other) refer to **"Cleaning Recommendations Clogged Filtration Discs".** Thoroughly wash the discs with fresh water and then reassemble the discs on the spines. (Figure 6)

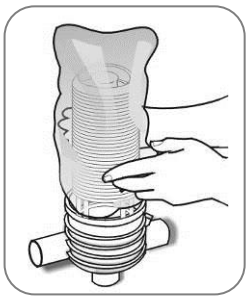

Figure 4

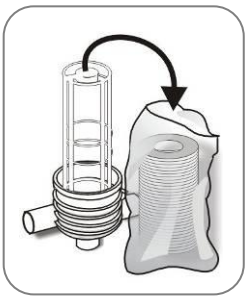

Figure 5

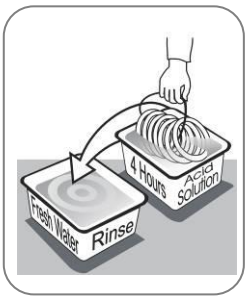

Figure 6

Check that the correct quantities of discs are assembled on the spine: when the discs are pressed with two hands, the top disc should be level with the imprinted circle on the outside of the spine (Figure 7). Put on the tightening cylinder and tighten the butterfly-nut, (Figure 8, 9)

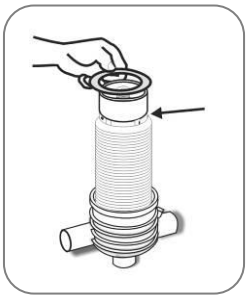

Figure 7

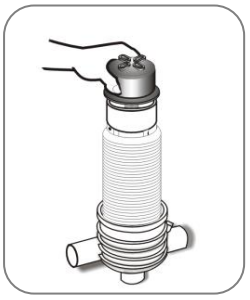

Figure 8

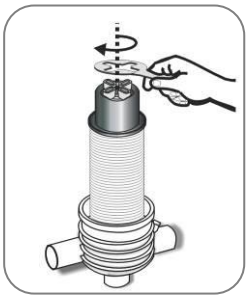

Figure 9

Reassemble the filter cover and tighten the clamp. (Figure 10, 11)

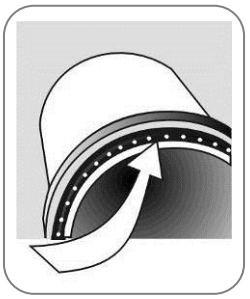

Figure 10

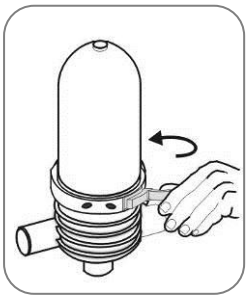

Figure 11

Cleaning Recommendations for Clogged Filtration Discs

Water-formed deposits may cause clogging of the filter discs. The formation of these deposits depends on the quality of the filtered water and environmental conditions like temperature, pH, light, duration of filtration and more.

Common water-formed deposits are:

- Biological or organic deposits (mostly mucous or oily to the touch, beige, brown or green in color)
- Iron oxide (rust) or other metal oxides
- Carbonates (white or gray deposit)
- Combinations of the above

If these deposits cannot be eliminated by pretreatment of the water, we recommend the following cleaning procedure:

Material and Equipment

- A well ventilated working place.
- 2 small containers (1 liter), 2 large containers (15 liter) and a stirring stick, all resistant to chemicals, preferably of polypropylene.
- Plastic rope to tie up the disc.
- Sodium Hypochlorite NaOCl - Strong oxidizing liquid, commercial concentration: 10%. Oxidizes and removes organic and biological deposits.
- Hydrochloric Acid HCl - Very corrosive liquid, commercial concentration: 30%. Dissolves and removes carbonates, iron oxide, and other deposits.
- Safety equipment: safety glasses, gloves, long pants, long sleeved shirt and shoes.

ATTENTION!

While working with chemicals protect yourself with the necessary safety equipment:

- Safety glasses, gloves, protective clothing
- Work in a well ventilated area
- Follow the manufacturer's instructions

Cleaning Organic and Biological Deposits

- Open the filter and remove dirty discs. **Attention** – Never open the filter before the pressure has been released.
- Arrange the discs loosely on the plastic rope
- Prepare a 5% Sodium Hypochlorite solution:
    1. Pour 5 liters of water into one of the large containers.
    2. Add 5 liters of Sodium Hypochlorite (10%) into the water.
- Soak the discs in the solution so that both sides are covered. To achieve maximum cleaning, agitate the discs several times with a stirring stick.
- Contact time with cleaning solution: up to 8 hours
- Remove the discs carefully from the solution, put them in the second large container and rinse them very well with clean water before placing them back in the filter.
- We recommend flushing the cleaned discs again in the filter to ensure that all chemical residues are removed.

The cleaning solution can be used for several sets of discs. As the cleaning activity of the solution deteriorates, it may be necessary to soak the discs for a longer time.

Cleaning Carbonates and Iron Deposits

- Open the filter and remove the dirty discs.
- Arrange the discs loosely on the plastic rope.
- Prepare a 5% Solution of Hydrochloric Acid:
    1. Pour 10 liters of water into one of the large containers.
    2. Carefully add 2 liters of Hydrochloric Acid (30%) into the water. Soak the discs in the solution so that both sides will be covered.

  PLEASE NOTE: Carbonates react violently with hydrochloric acid (foaming, gas evolution). To achieve maximum cleaning, agitate the discs several times with a stirring stick.
- Contact time with cleaning solution: 1 - 8 hours.
- Remove the discs carefully from the solution and rinse them well with clean water before placing them back in the filter.
- We recommend flushing the cleaned discs again in the filter to ensure that all chemical residues are removed.

The cleaning solution can be used for several sets of discs. It may be necessary to soak the discs for a longer period of time as the cleaning activity of the solution deteriorates.

Cleaning Complex Deposits

If the composition of the deposit is not known, perform the following test:

- Take 5 discs for the test.
- Soak 2 discs in a 5% Sodium Hypochlorite Solution.
  Preparation of the solution:
  Pour 1 cup of water into a small container, then add 1 cup of Sodium Hypochlorite (10% NaOCl).
- Soak 2 discs in a 5% Hydrochloric Acid Solution.
  Preparation of the solution:
  Pour 2½ cups (= 500ml) of water into a small container, then add carefully
  ½ cup (= 100ml) of Hydrochloric Acid (30% HCl).
- Keep one disc as a control.
  Observe the cleaning process:
  If one of the solutions removes all of the deposit, clean the discs in that solution according to the instructions above.
  If neither solution removes the deposit completely, continue with the test procedure.
- Remove the discs from both solutions, rinse them well with water and soak them in the second solution: put the two discs, which have been in the Sodium Hypochlorite Solution, in the Hydrochloric Acid Solution, and the other way round.
- Check the cleaning process:
  If one of the treatments removes all of the deposit, clean all of the discs following the same two-step procedure in the exact same order. Rinse the discs well between the two cleaning processes. If the deposit hasn't been completely removed, send a set of untreated discs to the laboratory for further examination.

8. Troubleshooting

No Backwash Operation

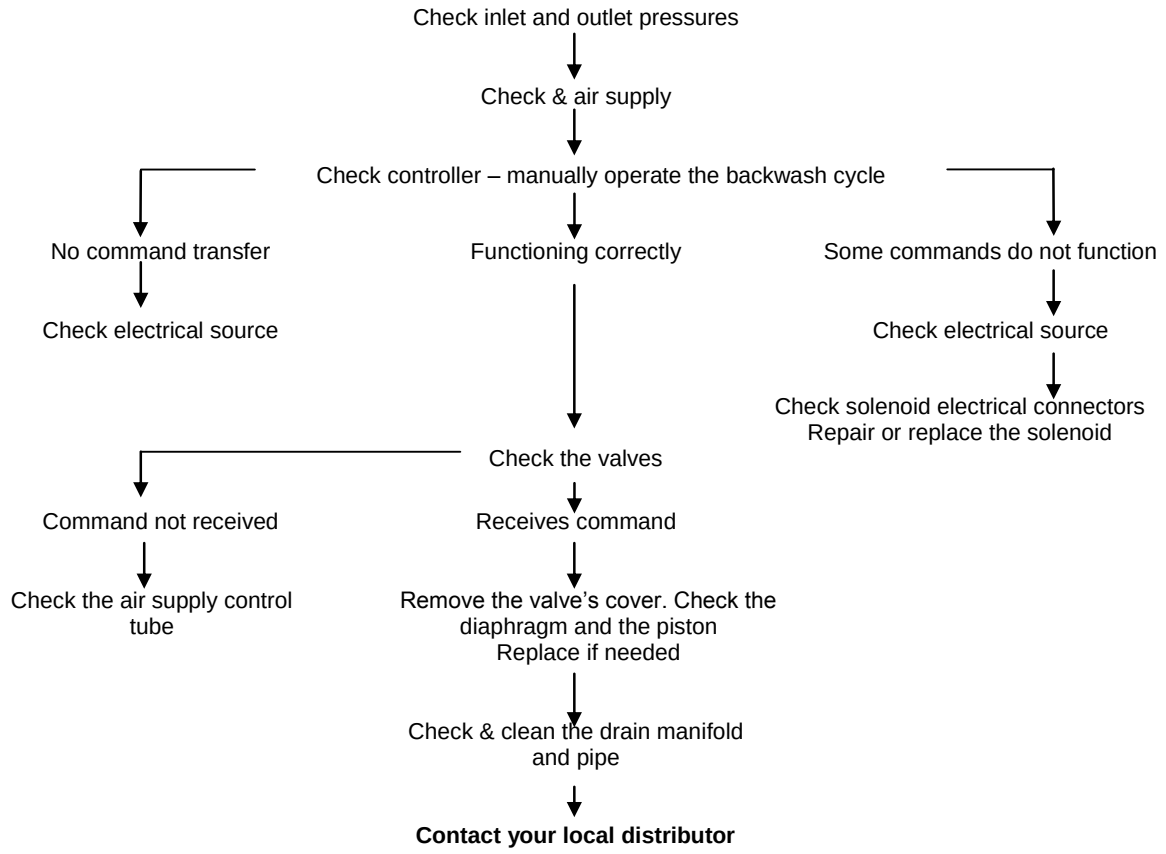

Continuous or Non-stop Backwashing

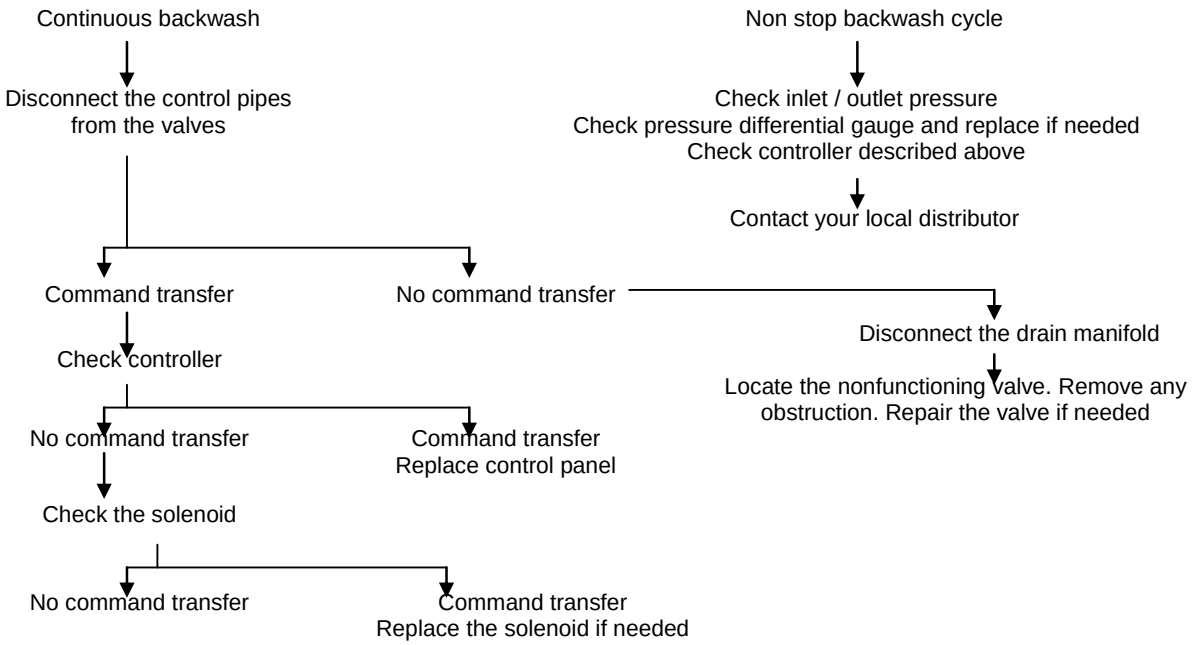

Contact your local distributor

9. Parts Schedule and Parts List

ITEM NO.	PART NUMBER	DESCRIPTION	QTY.
21	730104-000217	1/2"x1/4" Ball Valve	1
20	710103-000266	Spacer for Compact	2
19	720501-000139	1/4"*8mm Angle TEFEN	1
18	770104-000045	Gauge Port Seal	2
17	710101-000148	Gauge Ports Nut with Hole 3mm	2
16	720501-000297	1/8"*1/8" Tefen Bushing	2
15	720501-000148	1/4" TEFEN Nipple	2
14	720501-000137	1/8"x8mm TEFEN Angle	3
13	730110-000001	1/4"Finger Filter	2
12	720501-000135	T-Connector 8mmX1/8"MX8mm Pl.	2
11	710103-000196	40mm*265mm Pipe	1
10	780101-000303	1 1/4"*40mm Plasson Angle	1
9	780101-000340	2"*40mm Plasson Connector Male	1
8	780101-000335	1 1/4"*1 1/4" PLASSON Coupling	1
7	700190-000001	2"Pre-Filter to Compact	1
6	730102-000169	2*2"Bermad Valve Pl.Straight Flow	2
5	760108-000002	2-3"ARKAL Clamp	1
4	See Filtration Degree Table	2-3"Filter Element	1
3	770104-000248	2-3" Hydraulic Seal	1
2	710101-000906	2-3"Filter Cover	1
1	710103-000011	2"Body Filter Complex Thr.+1/2"Thr.	1

Filtration Degree:	20mm	55mm	70mm	100mm	130mm	200mm	400mm
Battery Cat. No:	110000-000022	110000-000015	110000-000011	110000-000014	110000-000013	110000-000012	110000-000010
F. Element Cat. No:	700101-000127	700101-000123	700101-000112	700101-000120	700101-000271	700101-000115	700101-000110

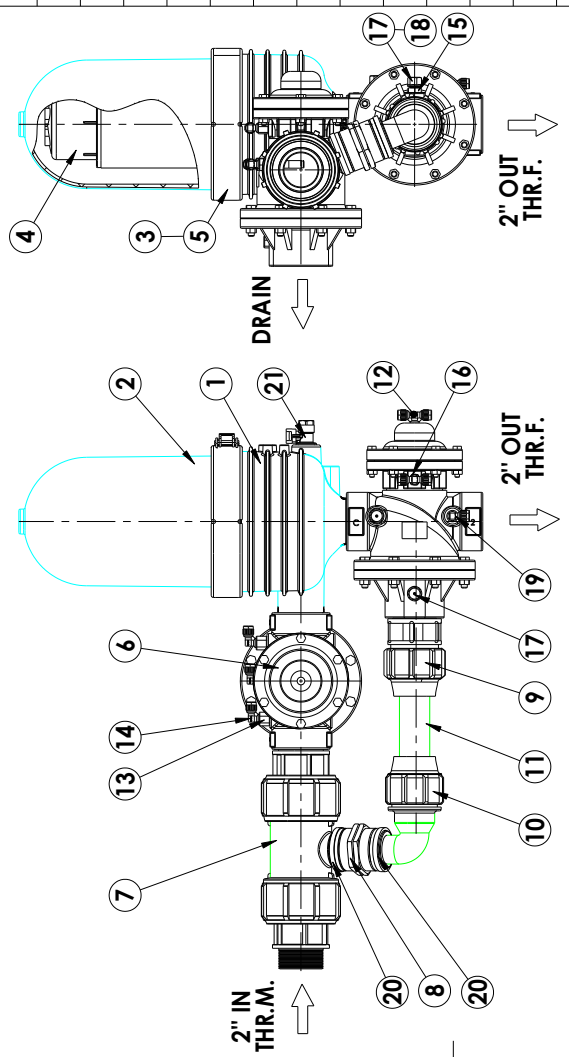

	NAME	DATE
DRAWN	OLEG	15/03/2007
CHECKED	MARINA	05/02/2014
APPROVED	EYAL	05/02/2014
B.O.M.	OLEG	04/02/2014

Confidential property information. Amiad Water Systems Ltd. reserves the rights to make changes. All copy rights reserved to Amiad Water Systems Ltd.

SUBJECT/PROJECT: 2" S.K. COMPACT FILTERS

PART NAME/TITLE: PART LIST

MATERIAL:

CAT. NO: 110000-000013

DRW. NO: 110000-000013 Rev. 0

SCALE: NO | SIZE: A3 | SHEET 1 OF 1

Ref. 1562M0201A1

Backup Drawing: 1562M0201A1

REV.	DATE	DESCRIPTION	NAME
0	03/02/2014	CHANGING TO SAP. CAT	ELENA

PATH-I:\MASTERS – SOLID\FILTERS_COMPLETE\2 INCH FILTERS\COMPACT\

ARKAL 2" S.K. FILTER

Cat. no.: 600000-000037(130mic)THREADED CONNECTION

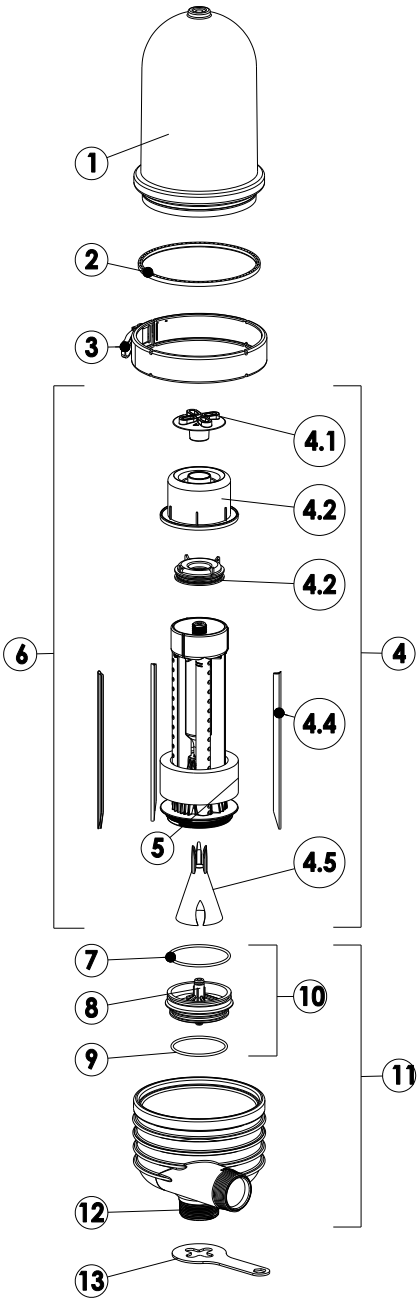

PARTS LIST

No:	DESCRIPTION	Cat. No.:	MATERIAL
1	Filter Cover	710101-000906	RPA
	Trasparent Cover	710101-000899	PC
2	Hydraulic Seal	770104-000248	EPDM
3	Clamp	760108-000002	SS
4	S.K. Model 2.7 Spine	700101-001193	Assembly
4.1	S.K. Butterfly Nut	710101-000435	RPA
4.2	S.K. Tightening Cylinder	710101-000106	RPA
4.3	S.K. Spine Piston	710101-000436	PE
4.4	Anti Friction Element	760109-000045	SS
4.5	Cone Membrane	770104-000065	NR
5	Discs Set (130mic)	700101-001176	PP
6	Filter Element (130mic)	700101-000271	Assembly
7	"O" Ring 2*234	770102-000295	EPDM
8	Spine Adapter	710101-000082	RPP
9	"O" Ring 2*237	770102-000034	EPDM
10	Complete Adapter	700190-000117	Assembly
11	Body Complex	700190-000092	Assembly
12	2" S.K. Body Threaded Out	710101-000014	RPA
13	"Butterfly" Nut Wrench	760109-000055	GS

MATERIALS:

1) PP - POLYPROPYLENE

2) RPA - REINFORCED POLYAMIDE

3) GS - GALVANIZED STEEL

4) SS - STAINLESS STEEL

5) NR - NATURALE RUBBER

6) PE - POLYETHYLENE

ARKAL
2" Compact Spin Klin Online orders and tech support by irrigationglobal.com

PLASTIC BACKWASH FILTER VALVE – DOUBLE CHAMBER

350 Series; Size 2"*2"

AMIAD Cat. No: 730102–000169 STRAIGHT FLOW

ARKAL
Fundamental version

PARTS LIST

No:	SAP Cat. No.:	PARS DESCRIPTION	MATERIALS
1.	730113–000317	BODY	R.P.A.
1.1	730113–000379	NUT	AISI 316
1.2	730113–000355	M8 WASHER	DIN 125A ZNC
1.3	730113–000318	BOLT	AISI 316
2.	730113–000507	ACTUATOR ASSEMBLY	
2.1	730113–000320	NUT	AISI 316
2.2	730113–000323	PLUG'S WASHER	ACETAL
2.3	730113–000324	SEAL	N.B.R.
2.4	730113–000441	"O" RING	N.B.R.
2.5	730113–000325	PLUG	ACETAL
2.6	730113–000326	SHAFT	AISI 303
2.7	730113–000540	"O" RING	N.B.R.
2.8	730113–000307	"O" RING	N.B.R.
2.9	730113–000306	NUT	AISI 316
2.10	730113–000445	SEPARATION PARTITION	R.P.A.
2.11	730113–000304	SPRING WASHER	BRASS
2.12	730113–000321	DISK	BRASS
2.13	730113–000446	DIAPHRAGM	NR–AL52
2.14	730113–000322	STOPPER DISK	PVC–U
2.15	730113–000449	NUT	AISI 316
2.16	730113–000451	SPRING	AISI 302
2.17	730113–000452	GREY COVER	R.P.A.
2.18	730113–000453	WASHER	AISI 316
2.19	730113–000454	BOLT	ANSI 316
3.	730113–000315	ASSEMBLY LOWER ADAPTER	
3.1	770102–000038	O–RING 2–243	EPDM
4.	730113–000339	ASSEMBLY BODY	
5.	700190–003407	ADAPTER ASSEMBLY	
5.1	710101–000186	ADAPTER	R.P.A.
5.2	770102–000117	"O" RING	NBR

MATERIALS:
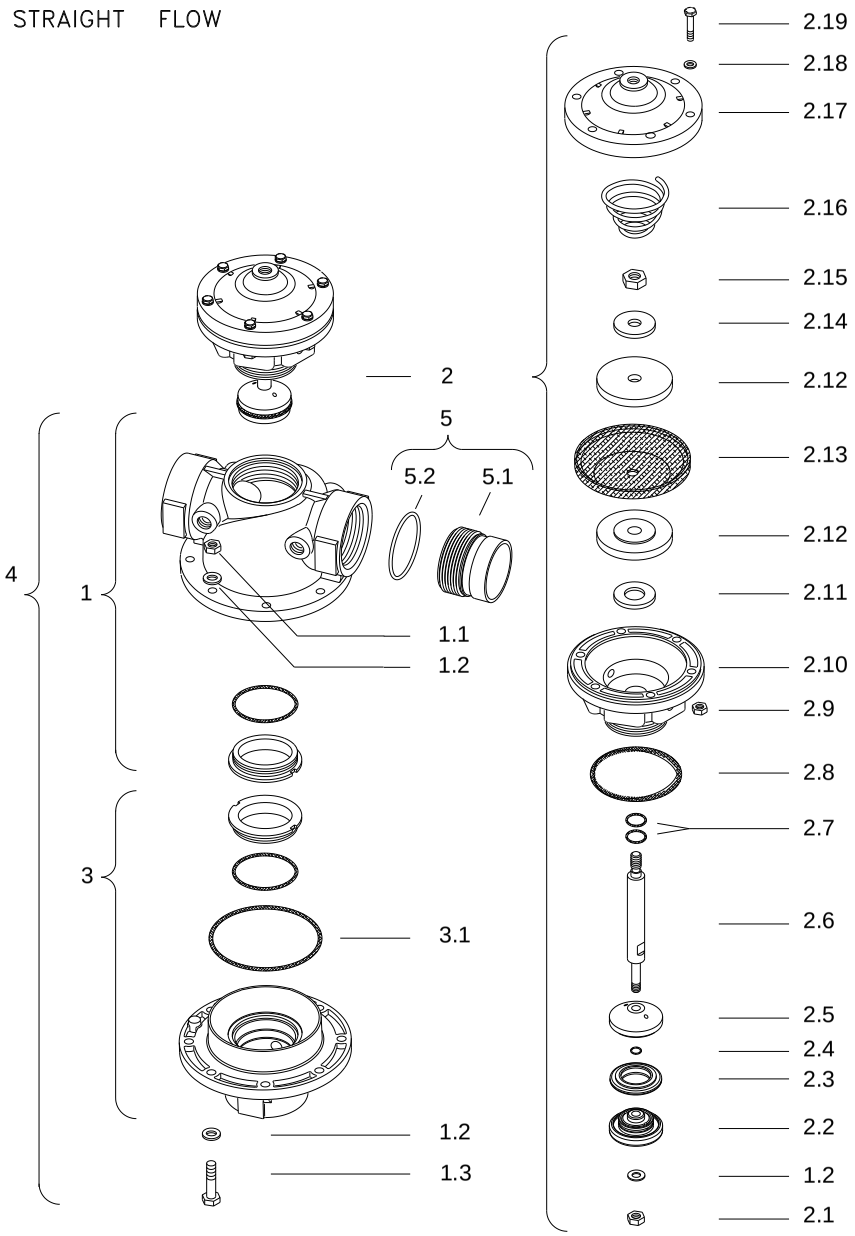
R.P.A. – REINFORCED POLYAMIDE
DIN 125A ZNC – STEEL
N.B.R. – NITRILE RUBBER
AISI 316 – STAINLESS STEEL
AISI 304 – STAINLESS STEEL
NBR – NITRIL RUBBER
PVC–U – POLYVINYL CHLORIDE (U)